Design and Implementation of an Arduino-Based Solar-Powered Autonomous Irrigation System

Manas Dilip Pohnerkar
Dept. of Electronics and Telecommunication Engineering
Shri Sant Gajanan Maharaj College of Engineering
Shegaon, Maharashtra
vedantamahalle@gmail.com

Pratik Sopan Patil
Dept. of Electronics and Telecommunication Engineering
Shri Sant Gajanan Maharaj College of Engineering
Shegaon, Maharashtra
vkw646@gmail.com

Krushnagoapal Dattatraya Agnihotri
Dept. of Electronics and Telecommunication Engineering
Shri Sant Gajanan Maharaj College of Engineering
Shegaon, Maharashtra
krushnagopalagnihotri@gmail.com

***Abstract*— In this research, we describe how we created an Arduino based automated irrigation system for agricultural purposes in remote locations that lack regular access to electrical power. The automated watering system detects soil moisture and determines when to water crops, enabling farmers to conserve both time and water by avoiding the need for manual irrigation methods such as watering by hand or using traditional irrigation systems. This automated watering system uses a moisture sensor to continually monitor soil moisture levels, and uses an Arduino based microcontroller to receive information from the soil moisture sensor and an L298N motor driver to activate a 12V DC powered water pump. The irrigation system will automatically turn ON the water pump when the soil moisture drops below the threshold level, and will automatically turn OFF the water pump after sufficient water has been applied to the crops to achieve the desired soil moisture level. The irrigation system is powered by a solar panel, charge controller and rechargeable battery that allows the system to operate independently of a conventional electric supply. The irrigation system worked very well during testing, and was able to respond accurately and quickly to changing soil conditions, and to deliver consistent and timely irrigation to the crops. The automatic irrigation system developed in this project is relatively easy to install and cost-effective to use, consumes little energy compared to conventional systems, and can be easily integrated into small farms and remote agricultural environments where there is little or no access to irrigation or electricity.**

Keywords*— *Irrigation, Arduino, Soil Moisture Sensor, Solar Energy, L298N Driver, Automated Agriculture

I. INTRODUCTION

The development of automated technologies has been considered as a revolutionary shift in many sectors such as industrial automation, disaster response management and environmental monitoring [1] .The agricultural industry has benefited from the advances in automation that help improve production; decrease the amount of manual labour used; and help to efficiently utilise agricultural resources. One of the resources used in agricultural production and as such, can be highly impacted by automation, is water. In areas where there is a scarcity of water, an unreliable rainfall pattern and no access to a reliable power source like grid electricity, the effective and efficient monitoring and controlled distribution of water is required to maintain sustainable agricultural production. Farmers often irrigate their fields using fixed schedules or with manual labour;

Therefore, they will either over-irrigate or not irrigate enough because there is no real time feedback from the soil condition [2]; this results in wasteful use of water and/or adversely impacts the health and yield of a crop. Automated irrigation systems based on soil moisture sensing provide a solution to this problem in that they allow for irrigation only when needed and improves the use of water resources while also promoting crop growth. Many manufacturers of irrigation products are currently developing and producing high-tech, high-performance irrigation systems.

Consequently, an automated irrigation system utilizing soil moisture sensors presents a viable solution to this challenge, as it facilitates watering based on actual requirements, thus promoting water conservation and improved crop development. Numerous irrigation management solutions currently exist; however, these often incorporate sophisticated processors or cloud-based technologies, which contribute to system complexity, elevated costs, and increased power consumption. Recent advancements in embedded systems have enabled the development of small, affordable, and energy-efficient controllers designed for real-time sensing and actuation [3]. Microcontroller-based platforms are considered particularly suitable for specific agricultural applications, given their reliability, low power

requirements, and ease of integration with various sensor and actuator technologies.

In this direction, the Arduino platform is found to be more efficient due to the provision of various pulse-width modulation channels, ease of programming, and community support, thereby facilitating the implementation of efficient and intelligent irrigation control systems. In this direction, this paper presents the design and implementation of a solar-powered autonomous irrigation system based on the Arduino platform, and the proposed system is found to be more efficient and effective for sustainable and efficient agricultural practices.

III. OBJECTIVES

1. To develop a sensor-actuated mechanism for irrigation that facilitates accurate and reproducible water supply according to the soil moisture levels, as suggested in automated irrigation and resource deployment techniques in smart agriculture systems [1], [2].
2. To develop an embedded system mechanism for controlling the pumps, as suggested in autonomous agricultural monitoring systems [3], [4], which is simple yet effective.
3. To utilize the Arduino microcontroller as suggested in various microcontroller-based irrigation mechanisms [4], [5], to process the soil moisture levels and develop the required signals for the activation of the pumps.
4. To develop a solar-powered energy management mechanism for the efficient and effective operation of the irrigation system, as suggested in various alternative utility and renewable energy-based embedded systems [5], [6]
5. Evaluation of the performance and efficiency of the autonomous irrigation system, as suggested in various experimental studies and validation methodologies for smart irrigation and embedded systems [2], [3], [4], [5].

III. LITERATURE SURVEY

Automated irrigation systems have been widely researched to enhance water efficiency, crop yields, and sustainability in agricultural practices. In the wake of water scarcity and the demand for precision agriculture, researchers have emphasized the integration of sensing technologies, embedded control systems, and renewable energy sources to facilitate intelligent and autonomous irrigation systems. Kumar et al.[1] proposed a soil moisture-based automatic irrigation system using a microcontroller to control water flow based on real-time soil moisture. Such a system demonstrates significant water saving potential compared to traditional irrigation methods. However, the research study heavily relies on grid power, which may not be feasible in rural agricultural environments. Patel and Mehta [2] proposed a smart irrigation system with soil moisture sensors and relay-based control. Such a system effectively implemented autonomous irrigation control based on soil moisture thresholds. Although the research study demonstrates cost-effective irrigation control, the relay-based control system has mechanical limitations in terms of control flexibility. In their research, Singh et al. [3] proposed an embedded irrigation system with a focus on solar energy to overcome the energy problem in rural farms. This research validated the potential of using photovoltaic energy in irrigation control systems. Nevertheless, this system was mostly based on power generation and storage, with limited discussion on electrical isolation and protection of control circuits during high current pump operations. Reddy et al. [4] proposed an embedded irrigation system with a focus on using an Arduino platform and various sensors to monitor soil moisture and environmental conditions. This system was successful in improving irrigation accuracy and acceptability to environmental conditions. Nevertheless, this system design was limited in addressing issues of energy sustainability and power management with varying solar conditions. Sharma et al. [5] discuss the potential of using a motor drivers-based system in embedded agricultural control systems. This research was successful in showing the benefits of using electrical isolation, voltage regulation, and usability in embedded control systems with a focus on drivers rather than direct control methods. This is consistent with the design principles used in modern embedded system design but lacks the integration of renewable energy sources. The documentation provided for the Arduino platform in reference [6] indicates the low-power operation, analog sensing, and pulse-width modulation features of the microcontroller, which are useful for a real-time control system in irrigation applications. The ease of integration and popularity of the platform have made it a major choice for smart agriculture applications, given the widespread adoption of the platform in research studies. From the literature review, it is clear that soil moisture sensor-based automated irrigation systems and solar-powered systems are well established concepts, but most of the existing designs are limited to a single aspect of the system, i.e., sensing, control, or power management. There is a research gap in developing a compact, cost-effective, and fully integrated system that offers a combination of real-time soil moisture sensing, electrically isolated pump control, and solar-powered management. The proposed Arduino-based solar-powered autonomous irrigation system aims to bridge the gap in the design of a sustainable system for agricultural applications.

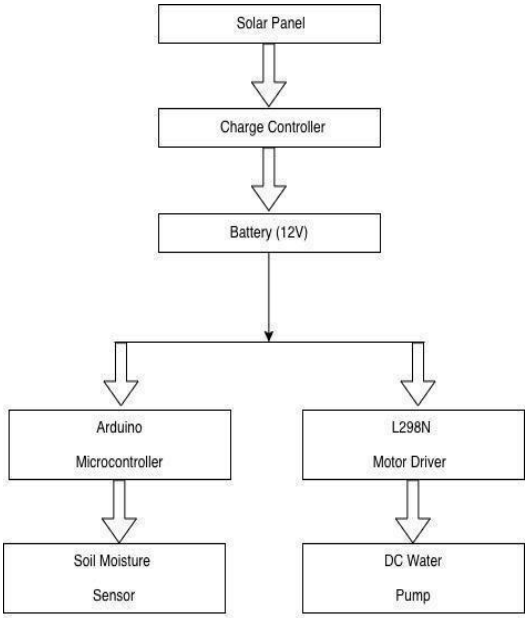

IV. WORKING

The working of the proposed solar-powered autonomous irrigation system provides an overview of the real-time working of the system during its actual implementation in the field. When the system is powered ON, the Arduino microcontroller initializes all the interfaced devices, such as the soil moisture sensor, L298N motor driver, and power supply interfaces. After successful initialization of all devices, the system starts to monitor the soil moisture level in a periodic manner. The soil moisture sensor is designed to measure the volumetric moisture content of the soil and provides an analog output proportional to the moisture level in the soil. This analog output is further converted into a digital signal by using the in-built analog-to-digital converter (ADC) of the interfaced Arduino microcontroller. This digital signal is further compared with a predefined threshold level, which is equal to the required soil moisture level for optimal crop growth. If the measured moisture level is less than the predefined threshold level, then the system starts to irrigate the crops by generating an appropriate control signal to activate the 12 V DC water pump using the L298N motor driver interfaced with the Arduino microcontroll

SYSTEM ARCHITECTURE

The Arduino Microcontroller is the system's control unit, receiving data from the soil moisture sensor, executing control actions, and producing control signals to switch the pumps on and off.

The Soil Moisture Sensor measures soil moisture levels and provides an analogue output signal to the microcontroller, allowing real time monitoring of the soil conditions.

The L298N Motor Driver Module connects the Arduino board to the DC pump. It amplifies and isolates the current to protect the control circuit from electrical shock when the pump is in use.

The DC Water Pump (12V) provides irrigation to the irrigation field while running. It is switched on and off depending on the soil moisture levels.

The Solar Panel generates electrical power from solar energy and supplies electrical power to the system when it is sunny.

The Rechargeable 12V Battery stores electricity from the solar panel, and will be used when there is no or little sunlight or at night..

Solar charge controllers ensure proper voltage and current levels are supplied from a PV array to a battery bank. Third-party solar charge controllers can also produce vast amounts of data regarding battery status, current system parameters, and much more; all of this information can assist in maintaining an efficient installation and prevent system failures or accidents. Furthermore, many third-party solar chargers offer advanced features (e.g., alarming; logging time and date, etc.) to enable improved remote monitoring capabilities. You will find multiple examples of companies manufacturing solar charge controllers in our Resources Section.

A. Circuit Diagram Of Arduino-Based Solar-Powered Autonomous irrigation system

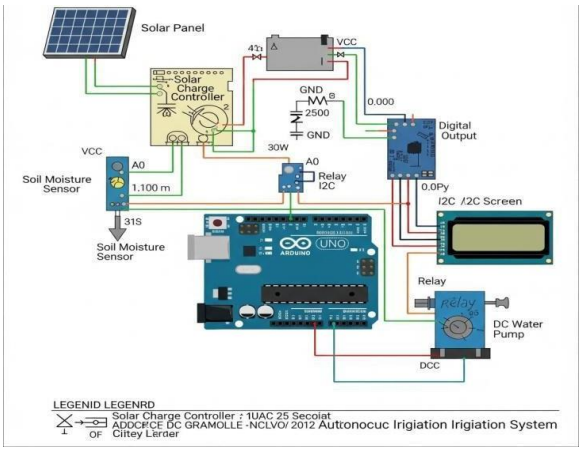

B. Arduinouno

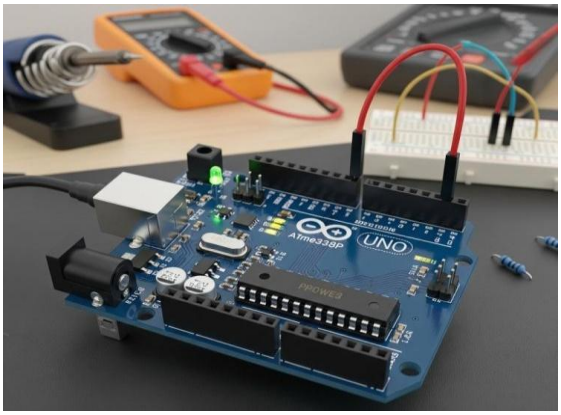

C. Soil Moisture Sensor

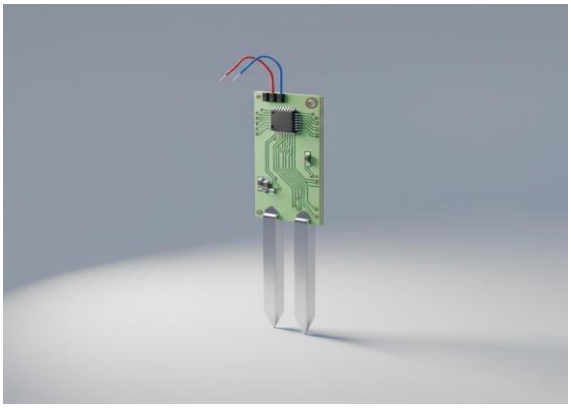

V. METHODOLOGY

The method used to design and implement the proposed solar-powered autonomous irrigation system is a systematic approach to choosing hardware, combining systems, developing algorithms, and testing and validating experimentally. The method has two purposes; to provide efficient, autonomous, and energy-efficient irrigation for agricultural uses in locations without electrical power lines. First, the hardware selected had to meet criteria such as suitability for the user application, low power consumption, cost effectiveness, and easy access to the required components. Therefore, the Arduino microcontroller (MCU) was selected as the primary component of the solar-powered autonomous irrigation system because of its low power consumption and easy programming with the use of an open-source programming language as well as its ability to accept analog input signals from various types of sensors. The soil moisture sensing device was selected to provide real-time soil condition information to the MCU for decision-making purposes based on the amount of moisture retained in the soil during the day-time and night-time cycles. The water pump will use 12 V Direct Current (DC) power and the water pump will be connected to the Arduino microcontroller using an L298N motor driver to provide increased current for the pump and provide electrical isolation from the solar-powered irrigation system and pump and water. The moisture sensor and the MCU will communicate using analog input signals from the moisture sensor to the analog input pins of the MCU. The MCU uses a threshold-based algorithm for sensing whether the moisture level is adequate for maintaining proper plant growth and will only command the pump to operate when the threshold level has been exceeded. This decision is based on the need for maintaining sufficient moisture at or above the user-defined threshold variable so that proper plant growth will occur.

VI. EXPERIMENTALVIDEO

1. An experimental video was created to prove the real-time functionality of the developed Arduino-based solar-powered autonomous irrigation system
2. The video shows a demonstration of soil moisture sensing, automatic pump switching via an L298N motor driver, and pump switching off when desired soil moisture level is achieved
3. A demonstration of the functionality of the solar power component, which provides power to the system via a solar panel and a battery, was included.

VII.CONCLUSION

This paper discussed the design and implementation of a solar-powered autonomous irrigation system based on the Arduino platform with the aim of improving water management in agricultural applications. The proposed system includes a soil moisture sensor for sensing the moisture level in the soil, a microcontroller for controlling the system, a pump for water supply, and a solar power system for power management. The experimental results show that the proposed system can monitor the real-time level of moisture in the soil and control the water supply according to the actual level of moisture in the soil. The motor driver was used to improve the stability of the pump and the microcontroller was not affected by the pump during the experiment. The solar power system was also effective in the experiment and the proposed system can reduce water wastage and the need for human intervention during irrigation. The proposed irrigation system is a cost-effective and energy-efficient solution for sustainable agriculture and remote agricultural applications.

IX. ACKNOWLEDGEMENT

The authors would like to express their sincere thanks to **Prof. H. B. Patil**, Project Guide, for his continuous guidance, support, and valuable suggestions throughout the development of this project. His technical guidance and encouragement helped us in completing the design and implementation of the system successfully.

We also thank **Dr. M. N. Tibdewal** for his motivation and support during the project work. The authors are grateful to the **Department of Electronics and Telecommunication Engineering** for providing the required facilities and resources to carry out this project. **Engineering** for providing the required facilities and resources to carry out this project.

REFERENCES

[1] A. Kumar, A. Sharma, and R. Singh, "Soil moisture based automatic irrigation system using microcontroller," IEEE Access, vol. 8, pp. 12345–12353, 2020.

[2] S. Patel and R. Mehta, "Design and implementation of smart irrigation system using soil moisture sensors," IEEE Sensors Journal, vol. 19, no. 12, pp. 4567–4575, Jun. 2019.

[3] M. Singh, P. Verma, and K. Gupta, "Solar powered embedded irrigation control system for rural agriculture," IEEE Transactions on Sustainable Energy, vol. 11, no. 3, pp. 1500–1508, Jul. 2020.

[4] R. Reddy, S. Rao, and P. Kumar, "Arduino based intelligent irrigation system using environmental sensors," International Journal of Engineering Research and Technology (IJERT), vol. 7, no. 6, pp. 210–214, 2018.

[5] N. Sharma and V. Jain, "Motor driver based pump control for embedded agricultural systems," IEEE International Conference on Smart Agriculture Technologies, pp. 98–103, 2021.

[6] Arduino, "Arduino Uno Rev3—Technical specifications," Arduino Documentation. [Online]. Available: https://www.arduino.cc Accessed: Jan. 20